NOTES:

1 CATALOG NUMBER, DATE CODE AND MANUFACTURING CODE LOCATED APROXIMATELY AS SHOWN ON SURFACE INDICATED

REV	DESCRIPTION	BY DATE	APPD
A	RELEASED PER ECR# 6859	BAS 07/09/01	V.B.H.

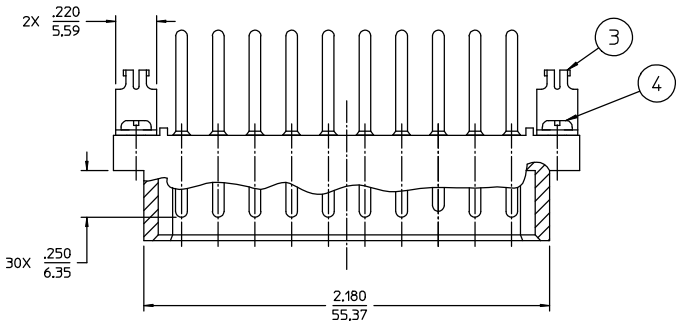

SPECIFICATIONS

MATERIALS

1	Insulator	Polybutylene Terephthalate (PBT), Color: Black, UL V-0 Rated
2	Pin contacts 30 Required	Copper Alloy Finish: 30 Microinches Gold over Nickel
3	Mounting Brackets 2 Required	Brass Finish: Tin/Lead over Nickel
4	Mounting Screws 2 Required	Steel Finish: Nickel Plate

PERFORMANCE CHARACTERISTICS

Underwriter's Laboratories Inc. authorization — UL Pending

Canadian Standards Association authorization — CSA certification pending

Insulation resistance	5000 megohms min
Dielectric withstanding voltage (at sea level)	2000 VAC
Current rating	13 Amps
Operating temperature range	-55°C to +125°C

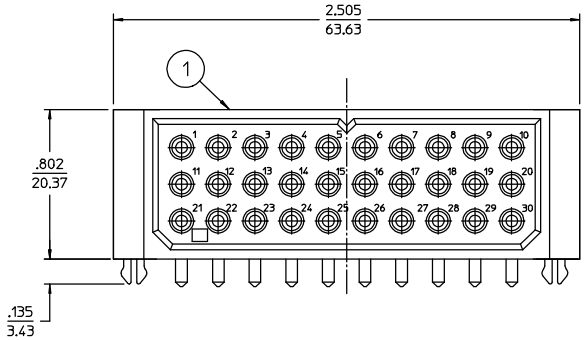

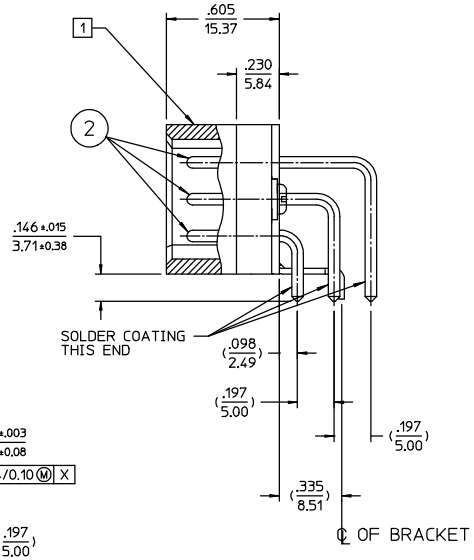

CATALOG No. PC330P51C21 SHOWN

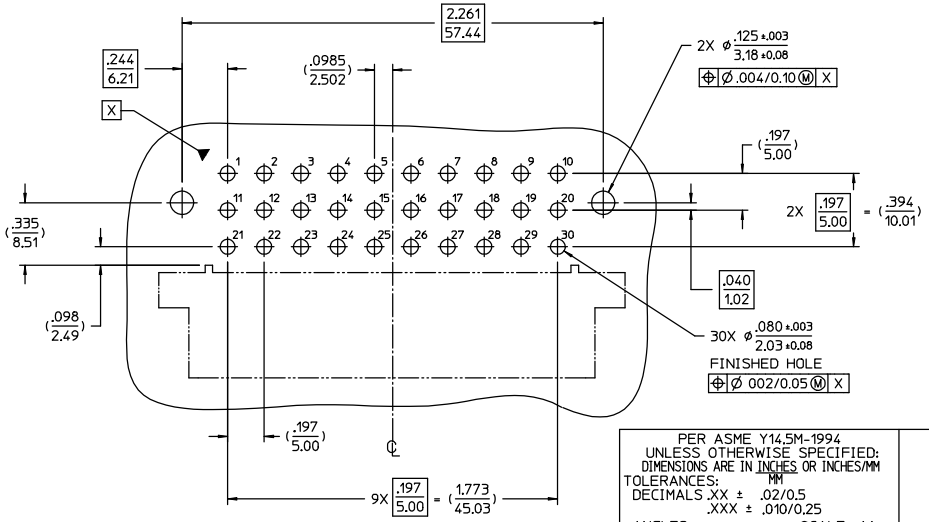

RECOMMENDED P.C.B. REQUIREMENTS

.062/1.57 BOARD THICKNESS

PER ASME Y14.5M-1994
UNLESS OTHERWISE SPECIFIED:
DIMENSIONS ARE IN INCHES OR INCHES/MM MM
TOLERANCES:
DECIMALS .XX ± .02/0.5
.XXX ± .010/0.25
ANGLES ± SCALE: 1:1

CUSTOMER DRAWING

DRAWN	DATE	APPROVED	DATE
BAS	06/24/01	W.P.Mazza	7/12/01
APPROVED	DATE	APPROVED	DATE
V.B.H.	07/12/01	DS	07/09/01

Litton

Winchester Retconn

400 Park Road
Watertown, Connecticut
06795

TITLE

30 POSITION
RIGHT ANGLE PIN CONNECTOR
WITH SNAP BRACKET

A	26421	SHT. 1 OF 1	REV. A

June 2006 - This drawing became the property of Winchester Electronics Corporation, Wallingford, CT.