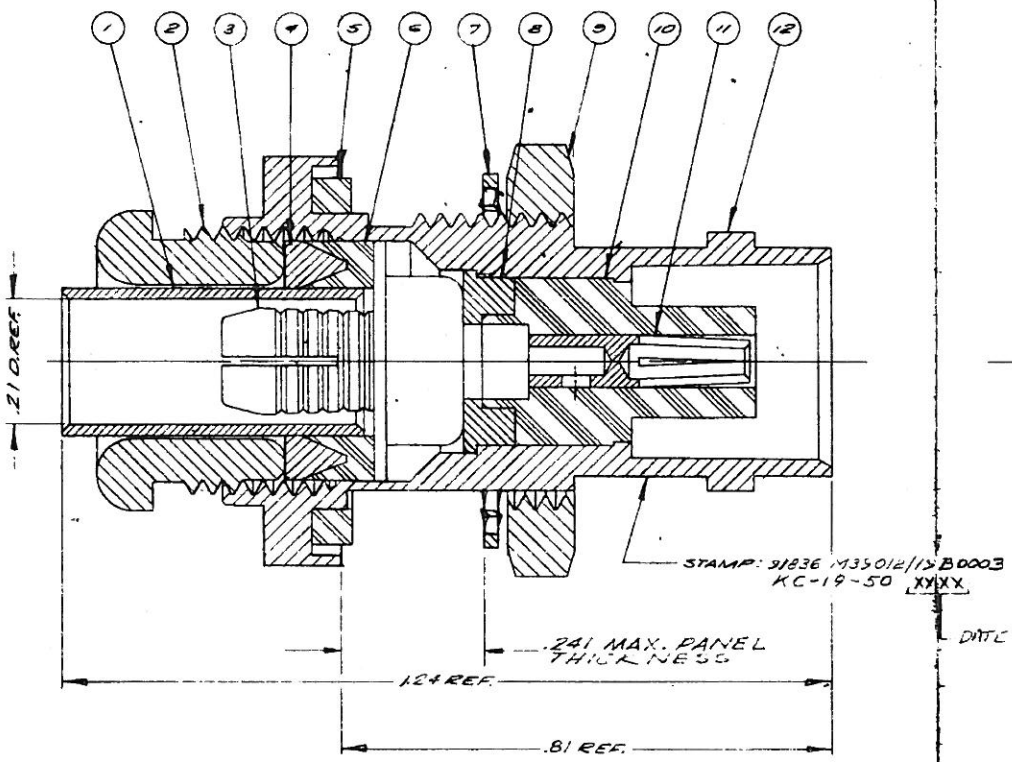

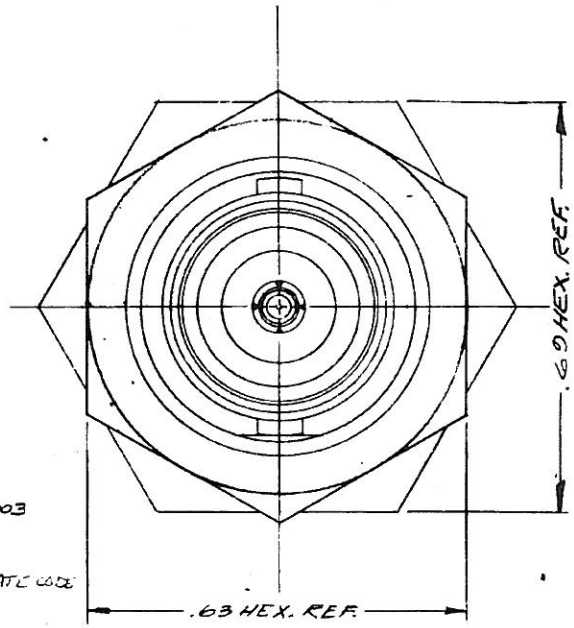

SD

M39012/19-0003

NOTES:
1. FOR USE WITH RG-58, 58A & 58 C/U CABLE.
2. FOR CABLING INSTRUCTIONS SEE CP-201A.
3. FOR CABLE TRIMMING USE KTJ-47 & KTD-77.
4. FOR FORMING USE CRIMP DIE SIZE 01.

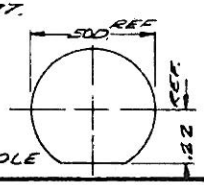

MOUNTING HOLE

ITEM	REQD.	DESCRIPTION	DWG. NO.
-	1	CABLING INSTRUCTIONS	1785-1-M88
1	1	FERRULE	N-59-29-2-MC7

UNLESS OTHERWISE SPECIFIED:

1. TOLERANCES:
FRACTIONS ± .010 DECIMALS ± .004 ANGLES ± 0° 30'
T. I. R. CONCENTRICITY OF ANY 2 DIAMETERS MAY NOT EXCEED THE SUM OF THEIR TOLERANCES.
2. REMOVE ALL BURRS, BREAK SHARP EDGES .003 MAX.
3. NO FILLETS PERMITTED.
4. SURFACE ROUGHNESS 63 MICROINCHES RMS MAX.
5. ALL DIMENSIONS PRIOR TO PLATING.

REVISIONS

ISSUE	CHANGES
1	CN 2313C 17 JUN 64
2	CN 5410 A 27 Oct. 67 K.S.H.
3	CN 7789 C R.H.W. 18 JUL 69
4	CN 8396C WLA 17MAR70
5	CN 8525C J.M. 5 MAY 70
6	CN 12601A 111E 9 AUG 73
7	CN 23168 E JEP 30 MAR 82
8	CN 29151 D AMD 28 SEP 87
9	CN 32279 A LNM 15 JUN 90

SD

KC-19-50

REF: SUPERSEDES UG-1804/U

FINISH
SPEC.
MATL.
SPEC.

BULKHEAD JACK

DRAWN J.B. DATE 13 MAY 64
APPR. RETF DATE 15 MAY 64

KINGS ELECTRONICS
40 MARSLEDALE ROAD
TUCKAHOE, N. Y.

M39012/19-0003

DIETZGEN 190M Agoproof Tracing Vellum 7771